International Journal of Emerging Trends in Engineering and Basic Sciences (IJEEBS)
ISSN (Online) 2349-6967
Volume 9, Issue 2 (March-April 2022), PP.138-140

Review paper on Alcohol Detection System in Vehicle

Ritik Dadhe, Chaitalee Dhabekar, Shailli Mahajan, Vaishali Chandekar

Department of Electronics and Telecommunication Engineering, Priyadarshini J L College of Engineering, India

Abstract:- The main intention of the project is to design an embedded system for implementing effective alcohol detection system that will be useful to avoid accident. There are many different types of accidents which occurs in daily life. Most often accidents occurs due to over drunken person. Though there are laws to punish drunken driver they cannot be fully executed. Because traffic police cannot stand on every road to check each and every car driver whether he/she has drunk or not. So there is a need for an effective system to check drunken drivers. Therefore in order to avoid these accidents we have implemented a prototype project. In our project, initially we check whether the driver has drunken or not by using the MQ3 GAS sensors. Earlier system were designed only to detect the presence of alcohol in vehicle, which leads to a false detection, even if the co-passenger or any of the person in the vehicle is consumed or if alcohol spilled on the driver, system is going to activate and vehicle will be controlled only if the driver is drunk. Here we have used two sensors one is breath sensor which a low sensitivity, high range sensor and other one is sweat sensor, which is high sensitivity, low range. Breath sensor positioned on the steering, and sweat sensor are positioned on the seat and seat belt. The microcontroller used in this prototype programmed in such a way that, if both sensors detect the presence of alcohol buzzer will start indication that the vehicle is going to shut down in the set period of time. If only breath sensor notices the speed of the vehicle is going to decrease to safe speed limit. If only sweat sensor detects there will be no effect on the vehicle speed. By using this system we can exactly recognize and control the vehicle if the driver is drunk, and false detection can be avoided.

Keywords: - Audio Buzzer, LCD, MQ3GAS sensor, Microcontroller, Vehicle Safety System.

1. INTRODUCTION

Automatic Alcohol Detection may be a system designed to tackle the growing problem of drunk driving. This technique is prepared with an associate in nursing MQ3 gas sensing element that is embedded on the wheel. MQ3 gas sensing element may be a specialized sensing element for alcohol detection. The Gas Sensor (MQ3) module is useful for gas discharge detection (in home and industry). It's appropriate for detecting Alcohol, Benzene, CH4, Hexane, LPG, CO. Owing to its high sensitivity and quick response time, measurements are usually taken as presently as possible. The sensor can operate at temperatures ranging from -10 to 50°C and consumes less than 150 mA at 5 V. can detect Alcohol gas concentrations anywhere from 200 to 10000 ppm. The sensitivity of the sensing element is usually adjusted by victimization of the potentiometer.

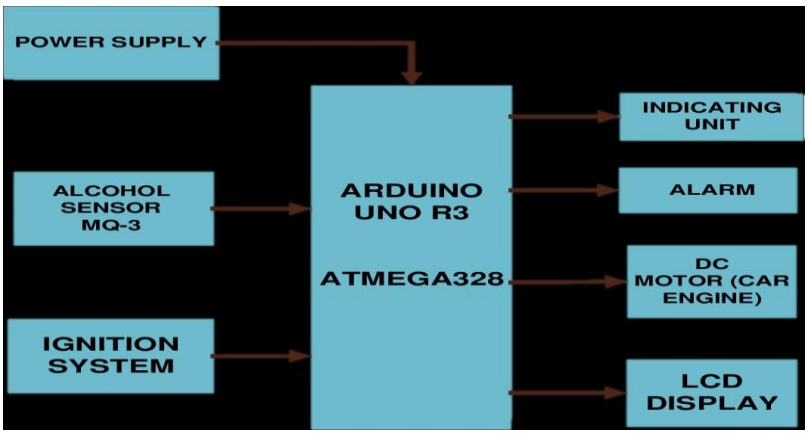

Fig.1 Block Diagram of Alcohol Detection System

2. Working Principle:

The alcohol device that is connected to port 1, 3rd pin has wood spirit share. Whenever the alcohol share of motive force go above the limit of alcohol device, then the motor that is connected to the port one.0 stops automatically. A message showing 'detected' is showed on the digital presentation that is connected to port 0. At constant time buzzer that is linked to port1, 5th pin is on acting as warning to the motive force. If the alcohol share of the motive force does not surpass the device alcohol content, then a note 'No alcohol motor on' is showed on the digital display screen.

3. LITERATURE SURVEY

3.1 Alcohol Detection in vehicles:

Authors: Mrs. K. Nirosha, C. Priyanka, K. Anil Kishore

Published in year: 2017

Description: Alcohol Detector in automotive project is meant for the protection of the Societies seating within the automotive. This project should to be fitted / put in within the vehicle. Drunk driving is associate degree unfortunate reality that exists in our world these days and causes several difficulties and tragedies for folks in several places. Drivers have the responsibility to form certain that they're sober and skilled of driving to their destination so they don't risk the lives of others still as themselves. Drinking will appear harmless, however isn't after you are attending to operate an outsized vehicle that might take the lives of innocent flocks once used improperly.

3.2 Automatic Alcohol Detection in Vehicle:

Authors: Balveen Singh Sahota, Niraj Rajpathak, Tanmay Kadam

Published in year: 2017

Description: Getting behind the wheel of a car, truck or any other motor vehicle – after consuming alcohol is considered a main crime. Drinking and driving is usually termed driving under the influence (DUI) or driving while intoxicated (DWI), and comprises operating a vehicle with minimum blood alcohol content (BAC) level of 0.08 %. The largest group of entities prone to drinking and driving are those who binge drink or are stressed with an alcohol use disorder (AUD). This implies that they drink an extreme amount of alcohol during a short period of time, making them prone to harmful side effects. Alcohol gets captivated in the human bloodstream roughly in around 30 to 120 minutes. At that instant, your breathing may hamper and your intellectual skills can also be delayed. Alcoholism is a situation which can be treated with the help of specialized treatment and medication. If someone is struggling with this, it is high time they search for help and get their life back on track. A Blood Alcohol Content of 0.09- 0.25 percent can cause sedation balance problems, lethargy and blurred vision. Muscle and vision synchronization becomes imbalanced due to such conditions which results in accidents.

3.3 Automatic Engine Locking System through Alcohol Detection:

Authors: Dr. Pavan Shukla, Utkarsh Srivastava, Sridhar Singh, Rishabh Tripathi, Rakesh Raushan Sharma

Published in year: 2020

Description: The Indian Ministry of Statistics stated thousands of road accidents in 2016. Though the report declared speed violation is the foremost cause for these accidents, it will safely be concluded that

almost all of the cases are because of driver's unstable state caused by drivers becoming drunk before they drive.

4. CONCLUSION

Alcohol Detector project can be used in the different vehicles for sensing whether the driver has consumed alcohol or not. Breathing analyzer project can also be used in various enterprises or organizations to detect alcohol consumption of employees. An alcohol detection system in an automobile is a must feature which every cab or bus should have. It is used to avoid accidents due to drunk and driving. It is stress-free and efficient to test the alcohol content in the body giving quick and accurate results. It is helpful for police and delivers an automatic safety systems for cars and other vehicles as well. This project can also be used in several companies or organisation to detect alcohol consumption of employees.

5. REFERENCES

[1] "Alcohol Detection and Accident Prevention of Vehicle", IJIERE, Volume 2, Issue 3, 2015.

[2] "Automatic Drunken Drive Prevention System", IJSRTM, Volume2, March-April 2014, ISSN 2321-2543, pg.74-77

[3] Alcohol detection Technologies product & future – by American Beverage Institute

[4] In vehicle Alcohol Detection based on MCU and design and Implementation of Safety control system (2012 International Conference on Future)

[5] Killoran, A., Canning, U., Doyle, N., & Sheppard, L, "Review of effectiveness of laws limiting blood alcohol concentration levels to reduce alcohol-related road injuries and deaths" Final Report. London: Centre for Public Health Excellence (NICE), 2010.

[6] Adamson, S., & Enright, S. Alcohol Gas Detector "Breathalyzer".

[7] Mitsubayashi, Kohji, et al. "Biochemical gas-sensor (biosniffer) for breath analysis after drinking. "SICE 2004 Annual Conference. Vol.1.IEEE, 2004